CUSTOMER SERVICE CONTACT INFO

Phone: 855-820-8439 (VIEW)
Fax: 855-820-8439 (VIEW)
Email: sales@cablerailingdirect.com
Website: www.cablerailingdirect.com
Address: 3315 NE 112th Ave #90/91, Vancouver, WA 98682

CABLEVIEW RAILING® INSTRUCTIONS

Choose **CABLE RAILING DIRECT™** for all your fittings and cablerail assemblies!

Table of Contents:

Just follow these simple steps:

1. NECESSARY TOOLS

1. MEASURING TAPE
2. CABLE CRIMPERS
3. CABLE CUTTERS
4. RECIPROCATING SAW/GRINDER/HACKSAW
5. VICE-GRIP ™
6. LEATHER GLOVES
7. WRENCH
8. BLACK MARKER

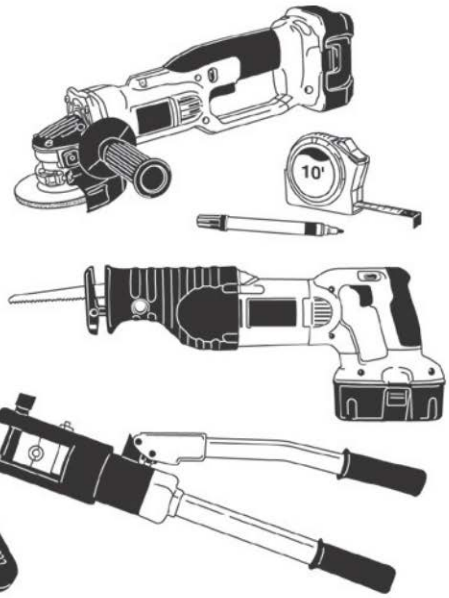

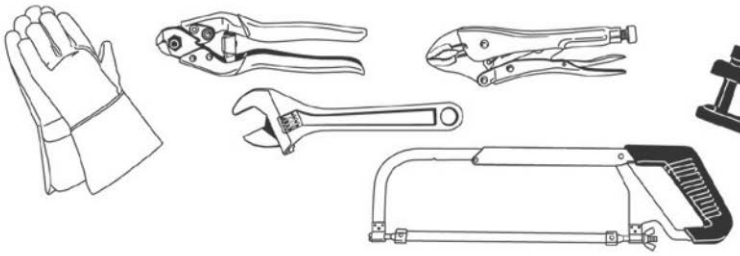

© 2015 Cable Railing Direct

2. LAYOUT

Fig 1

Determine where the cable will start and stop (ie; Sections). Reference the color-coded layout sheet (Fig 1) if it was included with these instructions.

CABLE RAILING DIRECT

PROJECT LAYOUT

Customer Name: John Smith **Estimate Date:** Sep 5, 2014

Cable Run by Letter	1X19 1/8" CABLE				CABLE FITTINGS												POSTS								TOP RAIL / POST-TO-POST RAIL											
					Selection 1			selection 2			additional						36 in WHITE				DECK MOUNT				WHITE RECTANGULAR											
	Cable Length(FT)	Cable Length(IN)	# of cable runs	TOTAL CABLE LENGTH (includes 6 in overage per strand)	Field Tensioner 1/8"	Field Terminal 1/8"	Acorn/Hex/Washer 1/8"				35 Deg Tapered Stair Washer 1/8"						Terminal Post w/Holes	Intermediate Post w/Holes	Terminal Post NO holes	Intermediate Post NO holes	3/8x4in Lag Screws	Hinged Screw Cover & 3/8 Washer			# Feet of Top Rail	# Feet of Snap Cover	Splice	90° Angle/Corner	Custom Angle Corner	Rail End Cap						
A	37		11	412 FT 6 IN	22		22				11						1	5	1	2	36	36			37	37		1		2						
B	15		11	170 FT 6 IN	11	11	22				22								2	2	16	16			15	15				2						
C	11		11	126 FT 6 IN	11	11	22										2	2			16	16			11	11			1	1						
D	18		11	203 FT 6 IN	11	11	22										2	7			36	36			18	18			3							
E	27	9	11	310 FT 9 IN	11	11	22										2	6			32	32			28	28		1		1						
F																																				
G																																				
H																																				
I																																				
TOTAL CABLE:				1224 FT	66	44	110				33						7	20	3	4	136	136			109	109		2	4	6						
																	Cable Cutter				N		1/8"		Top Rail 20' Sticks:				6		Snap Cover 20' Sticks:				6
Total Lineal Feet:				108.750													Cable Crimper				N															

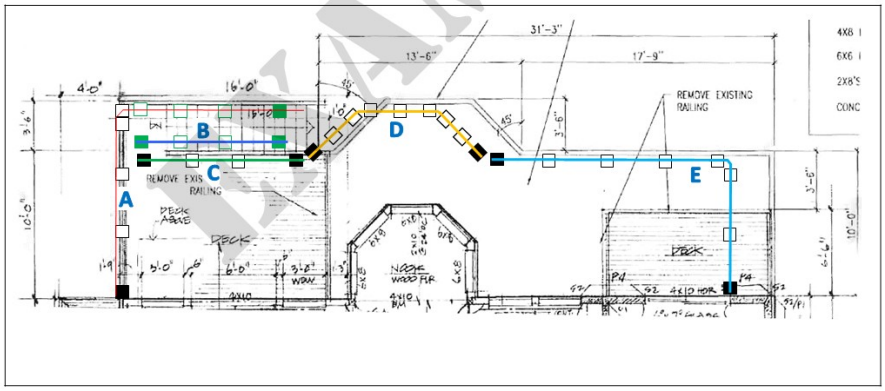

EXAMPLE

3. HOLE DRILLING

Do you need to drill holes for the cables? (Fig.2)

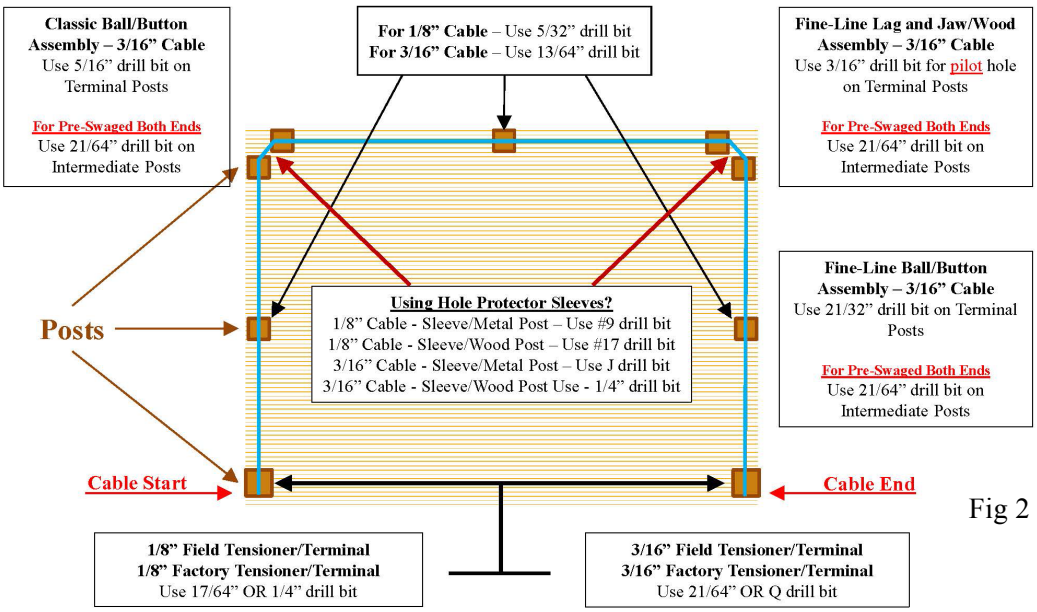

Fig 2

© 2015 Cable Railing Direct

4. MEASURE/CUT CABLE ASSEMBLY

This system will have a **FACTORY THREADED TENSIONER** fitting pre-swaged on one end of the cable and NO fitting attached to the other end of the cable when you receive your order. The following instructions will assist you in attaching the Swageless Receiver to the cable end.

4:1) Choose one of your terminal posts (where the cable starts or stops) as the start of your run. Push one factory-threaded tensioner through one hole and screw on the Cable Quick Nut whereby only 1/2" of the thread is exposed on the outside face of the post. (Fig. 3) Repeat for all holes of this post.

4:2) Push the raw cut end of the cables through all the drilled holes of the run and pull all the slack out of the cables. Mark the exit points, where the cable emerges on the outside face of the last terminal post. (Fig 4) Remove cables from the holes and place on the deck surface or similar flat surface. Do not unlace from the intermediate posts.

4:3) Cut the cable on the exit-point mark.

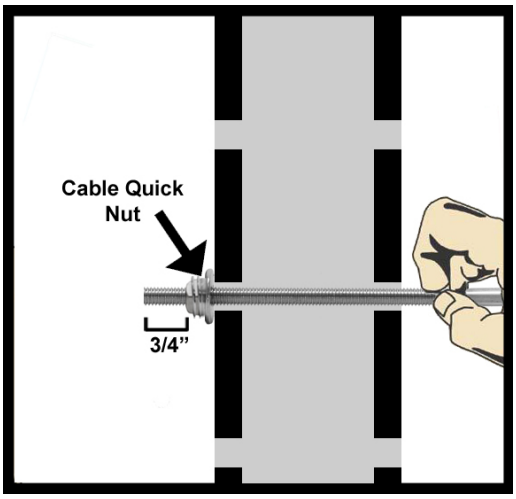

Fig 3

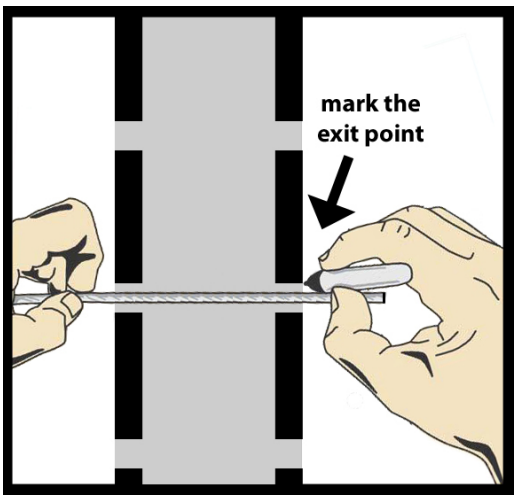

Fig 4

NOTE: Recommended deductions can be adjusted +/- to achieve desired fitting positions. Verify fitting position prior to cutting the cable.

5. ATTACH FITTINGS ON CUT END OF CABLE

1) Disassemble SWAGELESS RECEIVER, careful not to lose internal parts, and install onto cable (Fig. 4)

Fig 5

Receiver Body

3-Pronged Cable Grip

Bronze Washer

Hex Nut

Threaded End

© 2015 Cable Railing Direct

a. Place cable through beveled end of receiver and exiting the threaded end.

b. Place 3-pronged cable-grip onto cable by spreading prongs apart and pushing cable through until it exits the tied end between 3/8" and ½", but not more than 5/8" (Fig. 6)

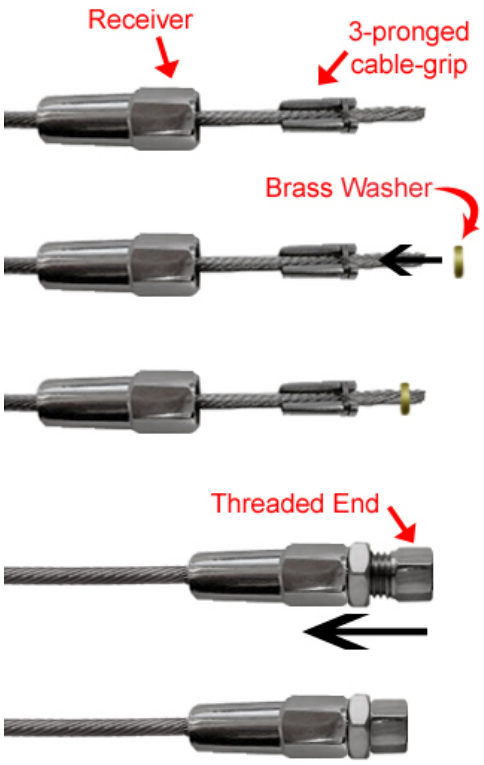

Fig 6

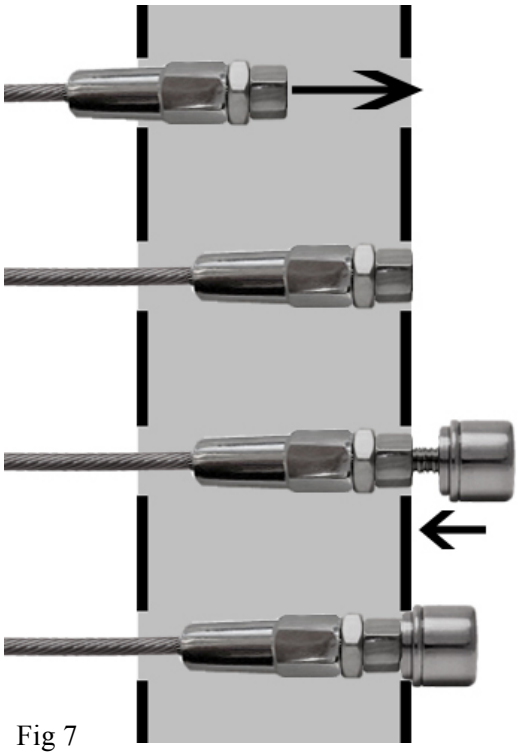

Fig 7

c. Slide receiver over 3-pronged cable-grip. Place the brass washer onto the cable (Fig. 6)

d. Using 2 wrenches, one on receiver body and one on threaded end, tighten the fittings until they can no longer be tightened. (Fig. 6)

2) Re-assemble fitting and place through hole in Terminal post. (Fig. 7)

6. TENSION THE CABLES

Apply a small amount of the supplied anti-seize lubricant and thread the CABLE QUICK NUT onto FACTORY THREADED TENSIONER and tighten with wrench until cable is taught. About 250 lbs. of tension is desirable. (Fig. 8)

© 2015 Cable Railing Direct

Use Vice-Grips and a piece of leather to protect the cable and to keep it from spinning. Start tightening the middle cable run first then tighten above and below this middle cable in an alternating sequence until all the wires have been tightened.

Most codes require that a 4" sphere must not be able to pass between the cables. Check with your local codes to ensure compliance.

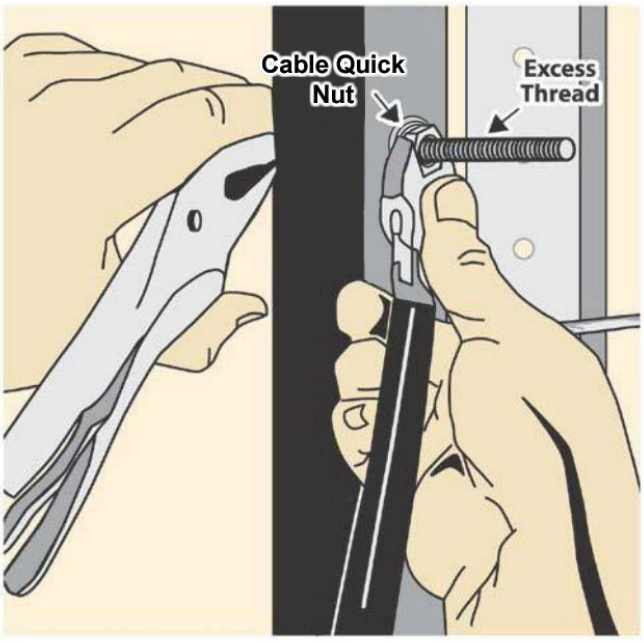

Fig 8

7. REMOVE EXCESS THREADS

Once the **CABLE QUICK NUT** is tensioned, remove excess threads on the **FACTORY THREADED TENSIONER** by grinding flush with the top of the fitting.

Install the **CABLE QUICK NUT COVER**

3 ACCEPTABLE METHODS TO REMOVE EXCESS THREAD

Fig 9

BEST METHOD

© 2015 Cable Railing Direct

Marine-Grade Stainless Steel Maintenance and Cleaning Procedures

Cable Railing Direct offers Marine-Grade Stainless Steel Cable Infill that boasts high resilience with little maintenance. The material is in and of itself corrosion resistant thanks to a thin "passive layer" of alloying elements that forms on the surface of stainless steel. While this protective layer is strong enough to withstand typical wear and tear, it's not impervious.

We want our customers to get the most out of their cable railing and encourage periodic maintenance to keep cable infill clean, beautiful, and strong for years to come. This is especially important for exterior applications, particularly those in harsh outdoor environments exposed to salt water, industrial pollutants, de-icing salt spray, atmospheric dirt, traffic film, etc.

Here are some simple procedures to keep your cable infill good as new. See Page 2 for warnings and coastal environment procedures.

General Cleaning:

Remove finger prints and other marks generated from daily use as needed. Apply mild soap and water or glass cleaner to area using a clean cotton cloth or chamois. Rinse clean with water and dry completely.

Oil, Grease, and Residue Cleaning:

Remove oil, grease, or residue left from other cleaning materials (such as floor cleaner or polishing detergents) as soon as possible. Apply alcohol-based products (including methylated spirit and isopropyl alcohol) or other solvents (such as acetone) several times using a clean, non-scratching cotton cloth until all traces have been removed. Use Scotch Brite if necessary. Rinse clean with water and dry completely.

Paint and Graffiti Cleaning:

Remove as needed using proprietary alkaline or solvent-based paint strippers. Apply chosen cleaning solvent several times with a clean, non-scratching cotton cloth until all traces of paint have been removed. Use Scotch Brite if necessary. Rinse clean with water and dry completely.

Salt Film and Environmental Deposit Cleaning:

Preform cleaning regularly in consideration of environmental conditions and the rate of deposit build up. Use a clean cotton cloth with Citrisurf solution (available in our store) to remove contamination. Apply cleaner evenly across cables to avoid a patchy appearance. Rinse clean with water and dry completely. Use Scotch Brite if necessary.

WARNINGS & TIPS

- Avoid use of the following products, as they will harm your cables:
  - Chloride-containing cleansers
  - Hypochlorite bleaches. Should accidental contact occur, rinse off immediately with copious amounts of fresh water.
  - Muriatic acid (commonly used to clean up tile/concrete installations)
  - Silver-cleaners
  - Scouring powders
  - Hard scrapers or knives
  - Non-stainless steel based scouring pads, cleaning wool, or wire brushes
  - Any cleaning utensils that have been used on “ordinary” (carbon) steel, as this may result in iron particle “cross-contamination”

- Do not leave stainless cables or fittings in contact with steel, iron, or any other metals, as this will cause rusting due to free-iron transfer. If your frame is made of a material other than stainless steel, use protective grommets or sleeves (which can be found in our store) to keep the metals from coming into contact.

COASTAL ENVIRONMENT MAINTENANCE

- Due to the regular high-salt content of oceanfront air, properties in these environments are encouraged to use our **Boshield T-9** for their cables, fittings, and/or stainless steel frame, in addition to the general maintenance procedures mentioned above.

- Clean stainless steel during initial installation and regular maintenance. We recommend this maintenance be done quarterly or as needed, and that any stains or rust spots obtained through daily use be removed immediately. Always reapply Boshield T-9 once stainless steel is clean and dry.

Please follow these procedures to get the most out of your stainless steel cable infill by Cable Railing Direct. If you have any questions, call us any time at 1-855-820-8439.